02-07 WRX License Plate Relocate

1/27/12

Thank you for purchasing the PERRIN Performance Front License Plate Relocation Kit. ***Please read through all the instructions before performing the installation. Because this kit removes the OEM tow hook from the car, it's a good idea to keep spare tools in the car to remove in case of emergency.***

Parts Included with the PERRIN Front License Plate Holder:

- **(1) PERRIN Offset Plate holder**
- **(1) PERRIN 02-07 Tow Hook Stem**
- **(1) 7/16-20 SS Hex Bolt, Black Oxided**
- **(4) M6x10mm Button Head SS Screws**
- **(4) M6 SS washers**
- **(7) 7/16" SS Flat washers, Black Oxided**
- **(1) M4 Hex Key**
- **(2) PERRIN Plate Frames**

Installation of PERRIN License Plate Holder:

1) Locate and remove front tow hook cover on front bumper. Take care in removing or damage to your paint can occur. A flat head screwdriver with a towel behind it is a good idea.
2) Install Tow Hook Stem into threaded hole using 19mm or ¾" socket and tighten to roughly 50ft-lbs. If hole looks rusty or corroded (or you live in an area where roads are salted in winter) apply a small amount of grease to threads, and spray some penetrating oil into the hole before installing.

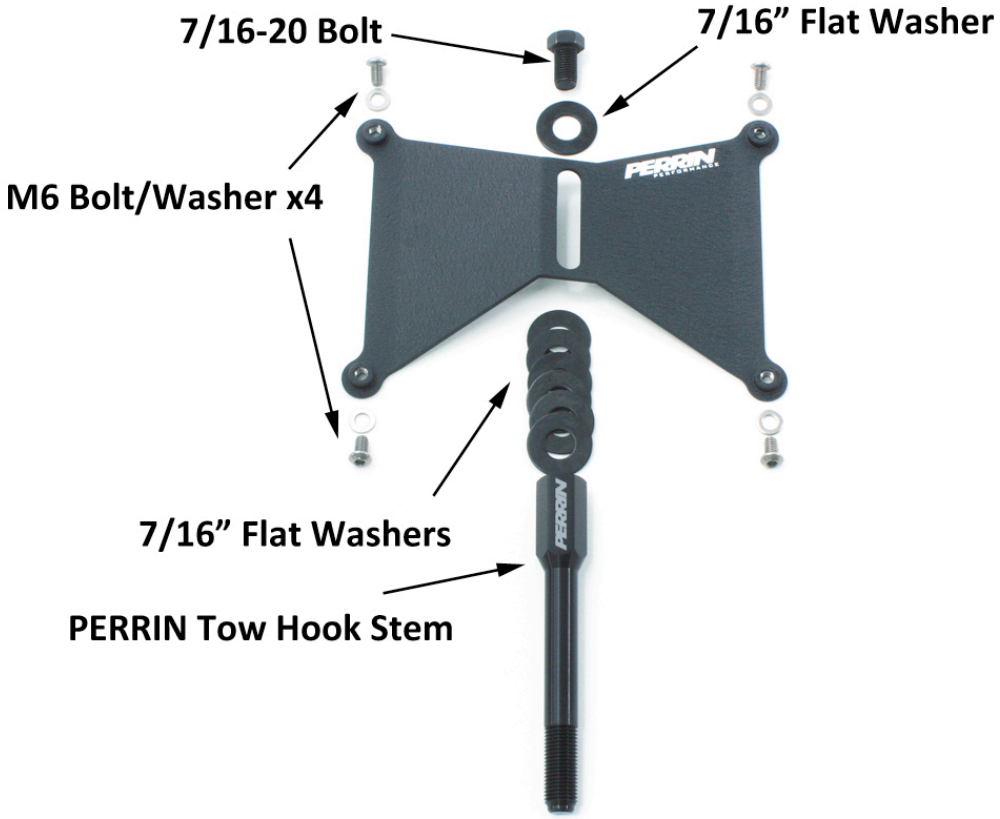

3) Install PERRIN plate holder to stem, use at least (1) flat washer between stem and holder and (1) washer between holder and bolt. Align plate holder to desired position and tighten bolt to roughly 30ft-lbs. Use included extra washers to adjust plate holder to desired position. Note: 02-03 car may only need one washer, where 06-07 cars may need all 6.
4) Install license plate and PERRIN Plate Frame to holder, using supplied M6 bolts and washers. Hand tighten bolts only!
5) Ensure License plate does not interfere with car in anyway, or damage WILL occur. If plate needs to be moved away from car add washers between Tow Hook Stem and Plate Holder.
6) After a 2-3 days of driving, recheck tightness of all hardware to ensure plate and holder have not come loose. NOTE: We recommend checking the tightness of hardware once a month to ensure plate never falls off.

For questions & comments please contact TECH@PERRINPERFORMANCE.COM
503-693-1702
See Website For Instant Chat Options